Dimension:
Unit=mm

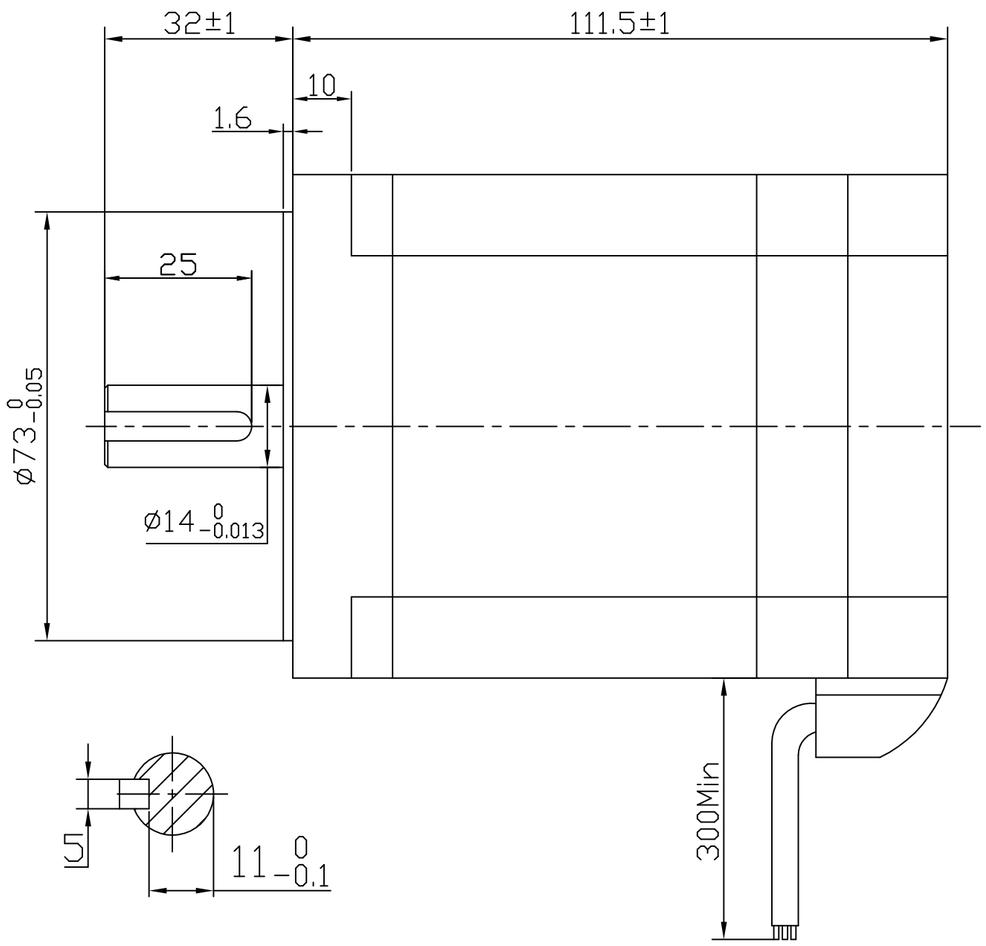

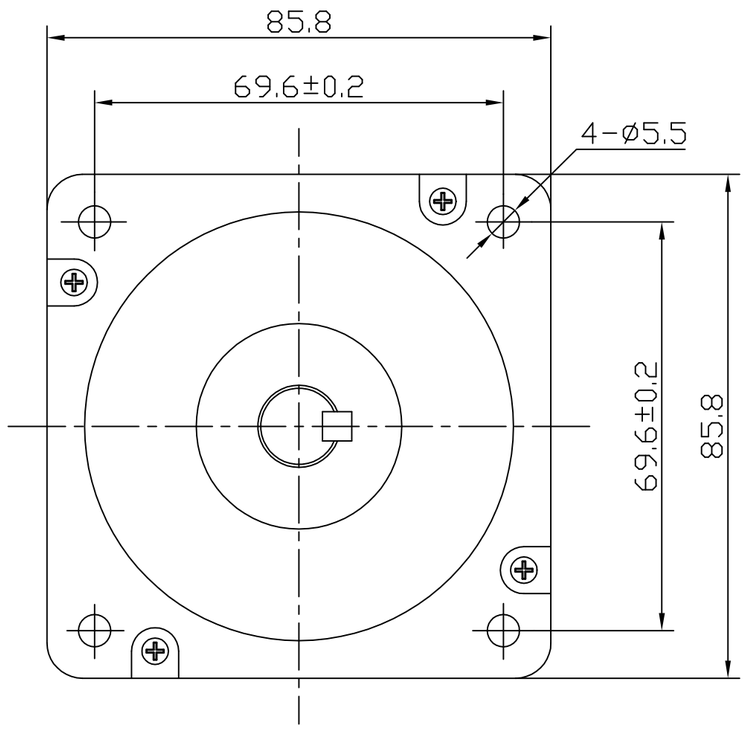

Connection diagram:

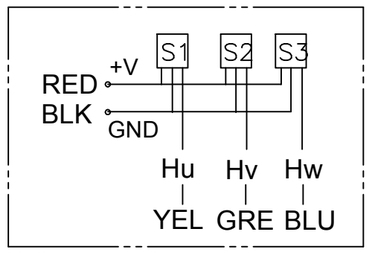

Hall sensor cable
Note: hall sensor power supply voltage +5 to +20VDC

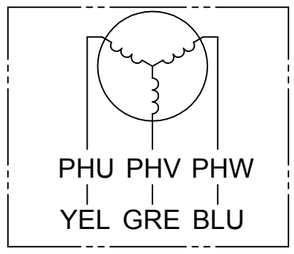

Wiring cable

ROTATION: CW SEE FROM LEAD END

MANUFACTUER MODEL	JK86BLS98-X015
NUMBER OF POLES	8
PHASE TO PHASERESISTANCE	0.2 OHMS
NOMINAL VOLTAGE	48 VDC
NO LOAD SPEED	3700±10% RPM
NO LOAD CURRENT	2.2 Amps Max.
RATED TORQUE	1.56 N-m
RATED SPEED	3000±10% RPM
OUTPUT POWER	490 W
BACK EMF CONSTANT	13 V/kRPM
TORQUE CONSTANT	0.124 N-m/A
INSULATION CLASS	B

ELECTRICAL CONNECTION TABLE			
+5V	RED	红	UL1007 26 AWG
HALL U	YEL	黄	
HALL V	GRE	绿	
HALL W	BLU	蓝	
GND	GND	黑	
PHASE U	YEL	黄	UL1015 18 AWG
PHASE V	GRE	绿	
PHASE W	BLU	蓝	

					Title: Specification		常州精控电机电器有限公司
REV.	QTY.	No.	SIG.	DATE			JK86BLS98-X015
DESIGN	H.W	16.12.28	STD.		CLS.MAK	WEIGHT / SCALE	
CHECK							www.jkongmotor.com
PROC.			APPR.		PAGE: 1/1		